PAGE	154

BY	CHK	REVISION RECORD MODIFICATIONS	DATE	REV.
ALLEN		RELEASE TO PRODUCTION	2007,8,4	1.0

SPECIFICATION
Current Rate: 3 AMP
Insulation Rrsistance: 1000mΩMin
Contact Resistance: 20mΩMax
Dielectric voltage: 1000V AC for one minute
Operation Temperature: -40℃ to +105℃

MATERIAL
Insulator: Polyester,UL94v-0
◎Standard: Nylon 6T
Contact Pin: Brass
Finish: Tin, Gold Plated
◎Standard: Gold Flash all over

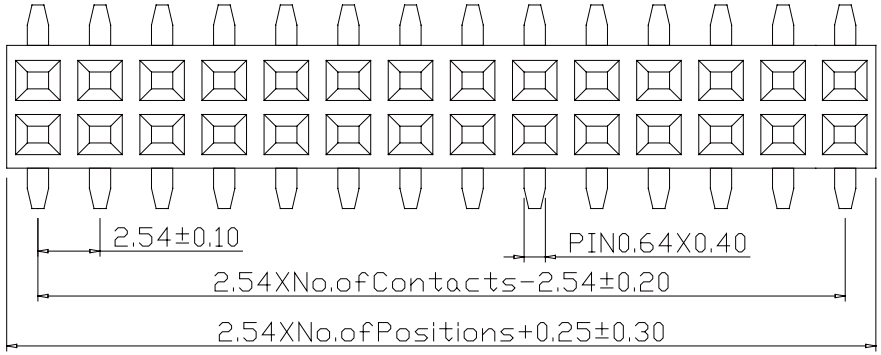

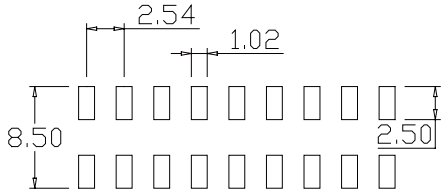

Recommended PCB Layout
(PCB TOLERANCE±0.05)

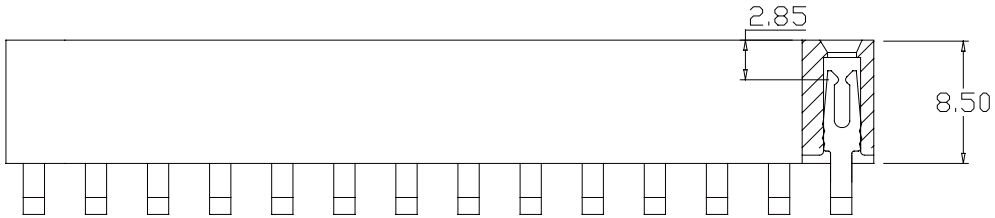

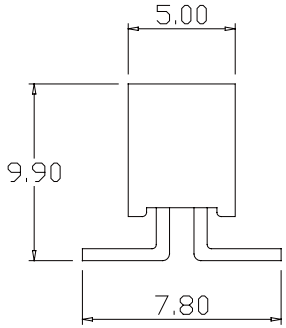

P S 1 M 8 5 - 2 X X X B X X X - U

No.of contacts per row (02-40)

G:Gold flah	S:Selective
GA:Gold 5u"	SA:Selective5u"
GB:Gold 10u"	SB:Selective10u"
GC:Gold 20u"	SC:Selective20"
GD:Gold 30u"	SD:Selective30"
T:Tin Plated	TE:Tin200u"

B:Black Insulator

D:W/O Cap
C:With Cap

D:W/O Peg
P:With Peg

T:Tube
R:Taping&Reel

U:RoHS+Nylon6T

APPRO	CHECK	DRAWN	PART NO.	PS1M85-2XXXBXXX-U			DESCRIPTION
			ITEM NO.				
			DRAW NO.				
			UNIT	mm	SCALE	no	
			TOLER		NO.		

Tel: 0769 22020068 Fax: 0769 22020069 E-mail: sales@vigortec.com